BL Arm Assembly

Item	Part No.	Description
1	81833126	B.L. Cylinder
2	8181949	5/8 x 1-3/8 Clevis Pin
3	8181912	Clevis Clip
4	8182016	3/4"-10 Nylon Insert Lock Nut, Gr.5
5	85608567	Spacer
6	85608038	B.L. Shoe
7	8182043	5/8-11 Nylon Insert Lock Nut Gr.5
8	8181951	B.L. Shoe Pivot Bracket
9	85613000	Pivot Pin
10	8182011	5/8-11 x 5" Hex Hd Cap Scr, Gr.5
*11		see p.16 B.L. Arm Valve
12	902189	1/4-20 x.504 HHCS
13	8182009	3/4-10 x 3 3/4" HHCS
14	8120326	ø1/2" Hitch Pin
15	85608566	Spacer
16	85610515	Pivot Assembly
17	8181970	Bead Loosener Decal
18	8182579	3/4-10x5"Bolt
19	85612993	B.L. Arm
20	81855583	Shoulder Screw (sold as 3 pack)
21	925757	10/24 x 1" HHCS Screw
22	8301035	3/8-16 Hex Nyloc Nut
23	8182682	10-24 Nylon Insert Lock Nut Gr.5
24	85611517	Link-Hndl,B/L
25	85611516	Coupling - Hndl, B/L
26	85610228	B.L. Lever Handle
27	85608569	Heim Joint
28	8182178	Nut-Hex, 5/16-18, Whz Lck
29	85608287	BL Shoe Assembly
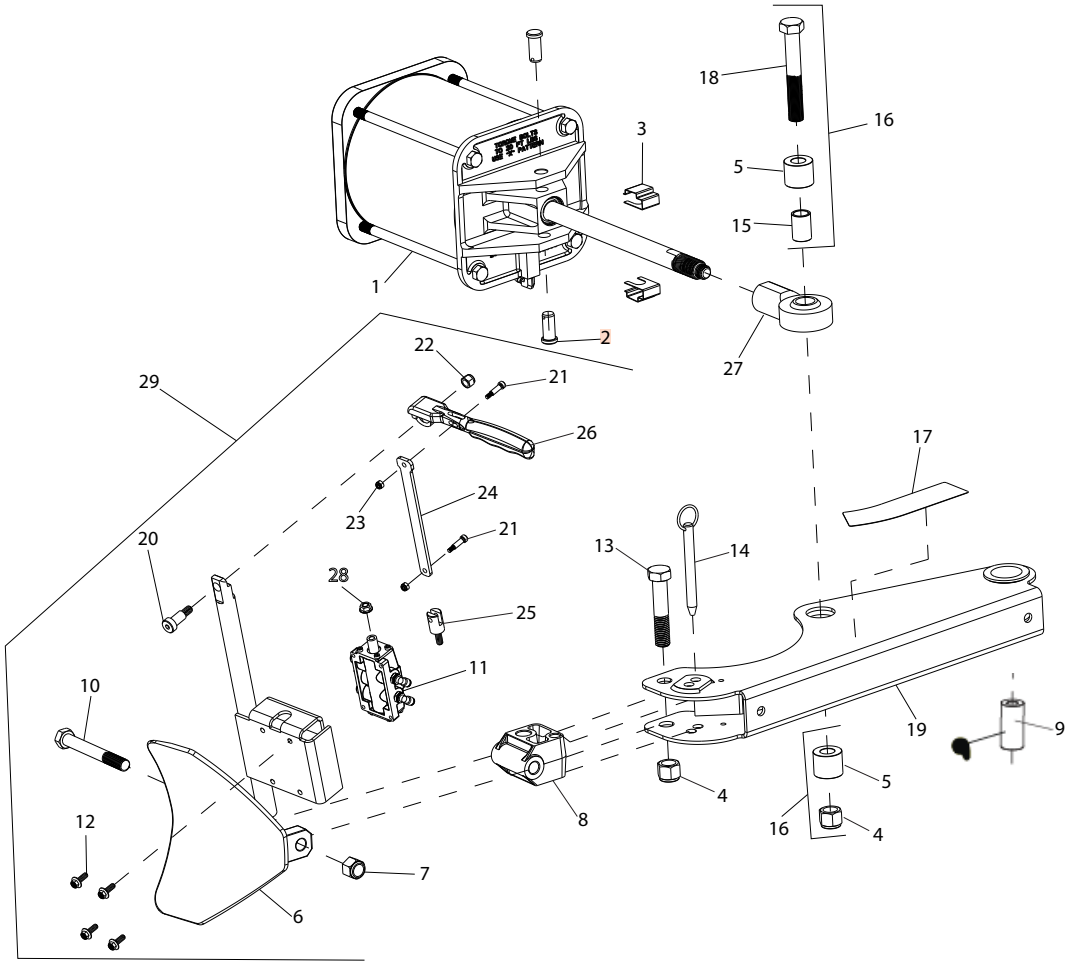
***Valve Assemblies (available only as individual components, see page 16)**